MERCRUISER (5.7L CARB ALPHA/BRAVO)
Serial Nbr Range: 0M600000 THRU 0W300754 (USA)

Fuel Filter and Fuel Pump

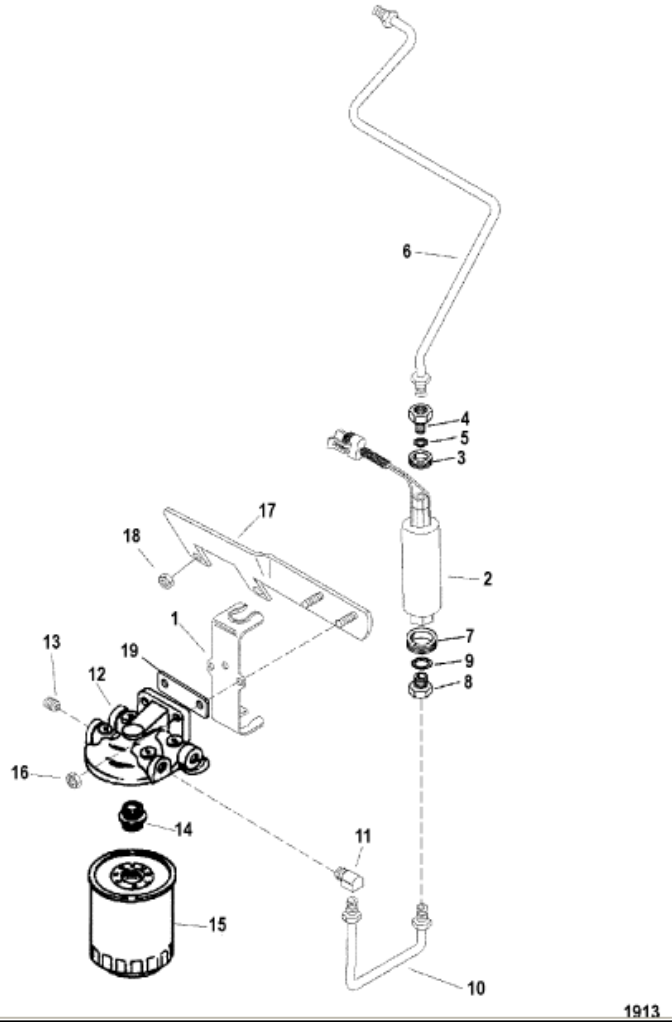

Parts List

Ref	Class	Part	Description	Qty	Comment	Footnote
1		861319	BRACKET, Fuel Pump	1		
2		861155A 3	PUMP ASSEMBLY, Fuel	1		
3	25	817491	GROMMET, (.56 Inside Diameter)	1		
4	22	805027A 1	FITTING ASSEMBLY	1		
5	25	805063	O-RING, (.301 x .070)	1		
6	32	861247 1	LINE, Fuel	1		
7	25	13467	GROMMET, (.88 Inside Diameter)	1		
8	22	805026A 1	FITTING	1		
9	25	805062	O-RING, (.530 x .082)	1		
10	32	861250	FUEL LINE ASSEMBLY	1		
11	22	93385	FITTING, (90 Degree)	1		
12		89876A 3	BASE ASSEMBLY, Fuel Filter/Wat	1		
13	22	32561	PLUG, Pipe (.250-18 Allen Head)	3		
14	22	816133	FITTING	1		
15	35	8028930	FUEL FILTER, Fuel/Water Separat	1		
16	11	29250	NUT, (.312-24)	2		
17		807918T	BRACKET, Fuel Filter Base	1		
18	11	860069	NUT, (.375-16)	2		
19		88641	INSULATOR	1		